REVISIONS				
SYM.	ZONE	DESCRIPTION	DATE	APP.

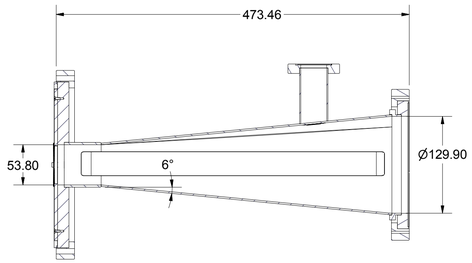

SECTION B-B
SCALE 1 / 4

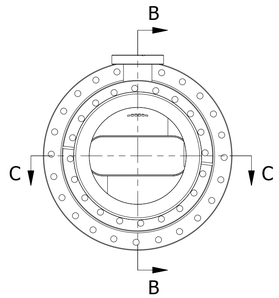

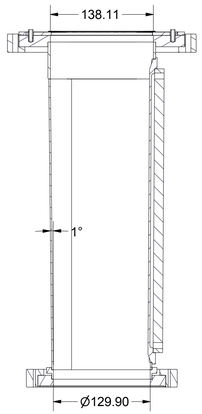

SECTION C-C
SCALE 1 / 4

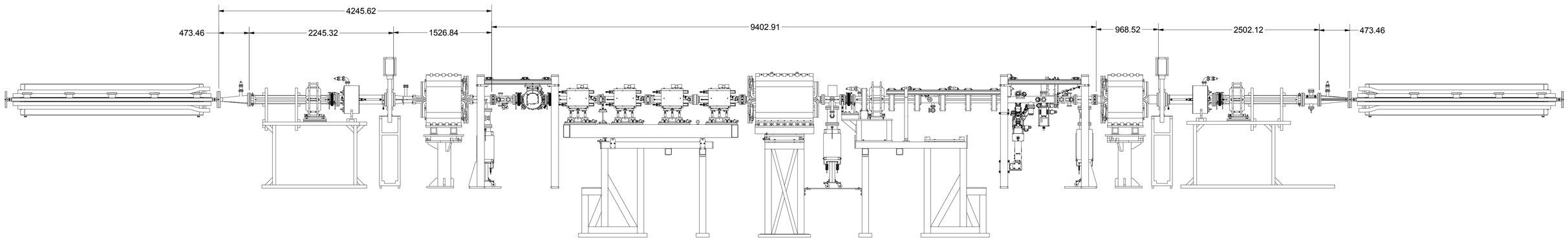

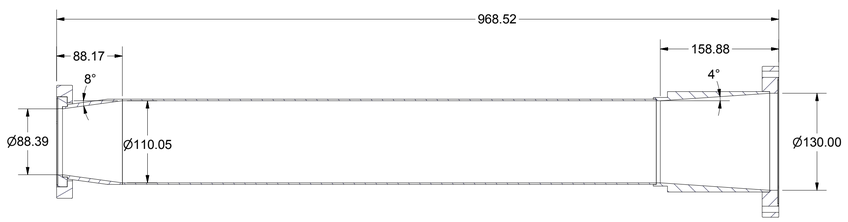

Q48E Chamber

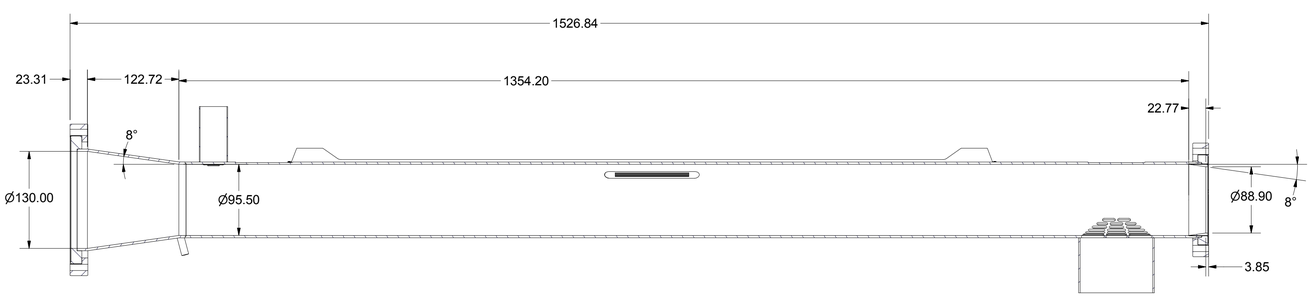

Q48W Chamber

ITEM	DWG. NO.	DESCRIPTION	G1	G2	G3	REMARKS	REV.
			QUANTITY				

PRINT DISTR.
PLOT DATE:
CAD FILE NAME: L3 Beampipe Profile for SYNRAD3D.idw

CR-1

UNLESS OTHERWISE SPECIFIED:
DIMENSIONS ARE IN INCHES;
TOLERANCES ON:
.0 ± .02
.00 ± .010
.000 ± .005
FRACTIONS ± 1/32
ANGLES ± 0.5°
ALL SURFACES

Cornell University
Laboratory for Elementary-Particle Physics

Floyd R. Newman Laboratory
Robert R. Wilson Laboratory
Ithaca, NY 14853

L3 Beampipe Profile for SYNRAD3D

as of January 2014

CHECKED BY:
APPROVED BY:

DRAWN BY	DRAWN FOR	DATE	SCALE	SIZE	DWG. NO.	REV.
jvc26		1/6/2014		D	L3 Beampipe Profile for SYNRAD3D	

SH. NO. 1 OF 1

L3 Beampipe Profile for SYNRAD3D
D
SH. NO. 1 OF 1
L3 Beampipe Profile for SYNRAD3D
D
SH. NO. 1 OF 1