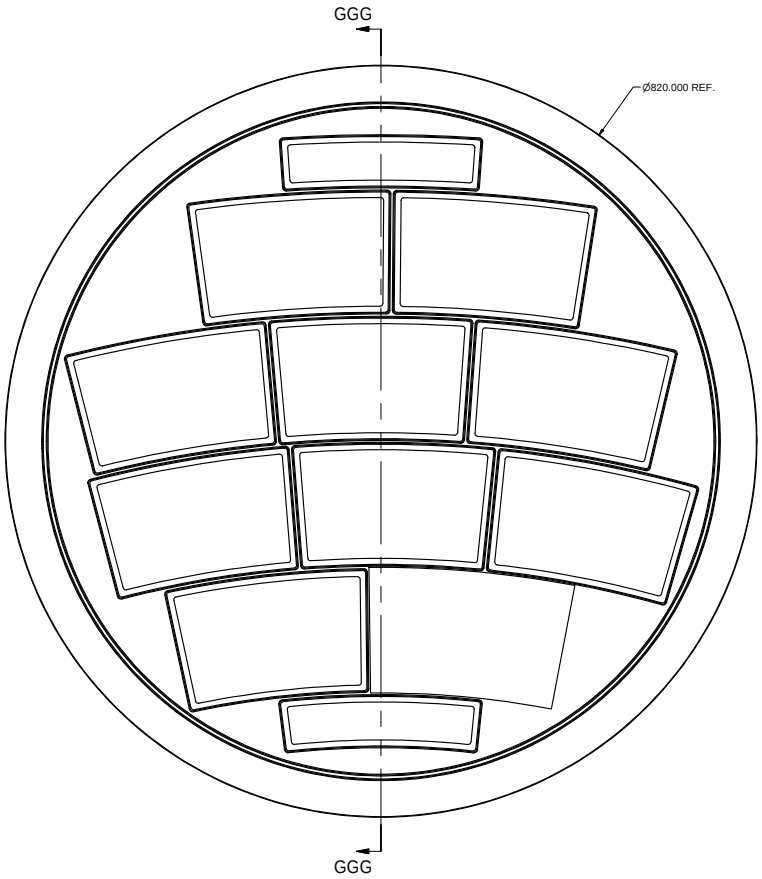

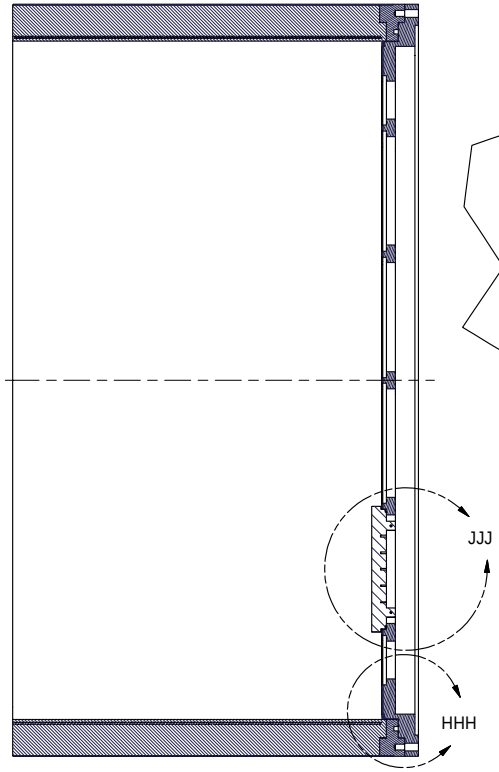

SECTION GGG-GGG
SCALE 3 / 8

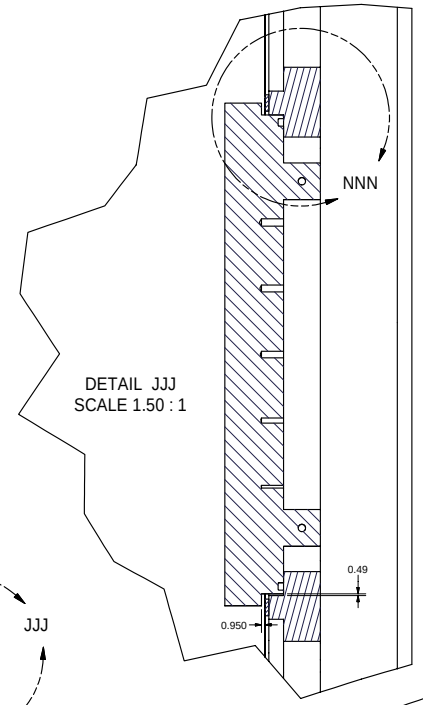

DETAIL JJJ
SCALE 1.50 : 1

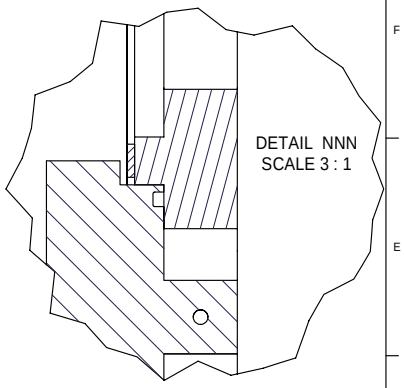

DETAIL NNN
SCALE 3 : 1

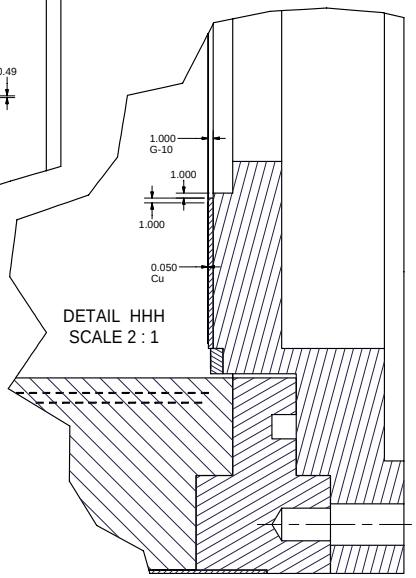

DETAIL HHH
SCALE 2 : 1

TPC LARGE PROTOTYPE WITH ENDPLATE 3 AND MODULE 3

FOR MACHINING LUBRICANT USE ONLY
ALKALINE DETERGENT LUBRICANT CIMSTAR 40
OR EQUIVALENT APPROVED BY CORNELL LEPP

REVISIONS				
SYM.	ZONE	DESCRIPTION	DATE	APP.

ITEM	DWG. NO.	DESCRIPTION	G1	G2	G3	REMARKS	REV.
			QUANTITY				

D

PRINT DISTR. CR-1

PLOT DATE: 7/11/2006
CAD FILE NAME: 6080-014.idw

UNLESS OTHERWISE SPECIFIED:
DIMENSIONS ARE IN INCHES;
TOLERANCES ON:
.00 ± .010
.000 ± .005
FRACTIONS ± 1/64
ANGLES ± 0.5°
ALL SURFACES 63

CORNELL UNIVERSITY LEPP
LABORATORY FOR ELEMENTARY-PARTICLE PHYSICS

CORNELL UNIVERSITY
Floyd R. Newman Laboratory
Ithaca, NY 14853

Linear Collider R&D, TPC Large Prototype

6080-014 34 NO. 37 OF 38

REDV

CHECKED BY:
APPROVED BY:

DRAWN BY	DRAWN FOR	DATE	SCALE			REV.
TMK	DPP	4/4/2006		D	6080-014 SH. NO. 17 OF 18	